FRELAN
HARDWARE

TECHNICAL SPECIFICATION

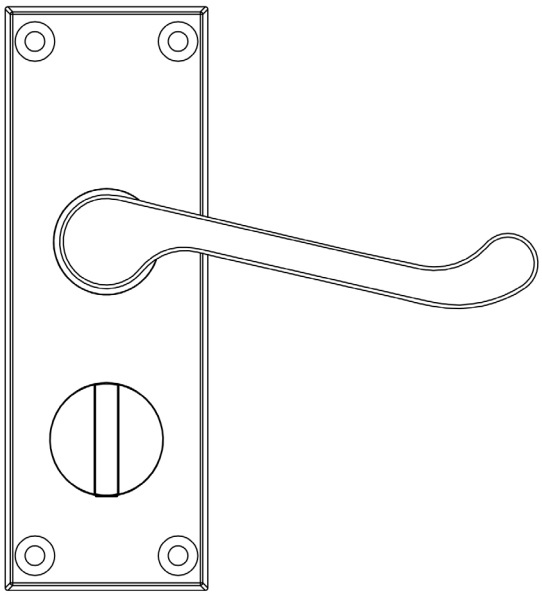

CODE

JV11PR

DESCRIPTION

Victorian Scroll - Privacy - Short Plate

STANDARDS

INTERNAL USE

PRODUCT SPECIFICATION

- Sprung
- Solid Brass - PB
- Zinc - PC / SC

TECHNICAL DRAWING

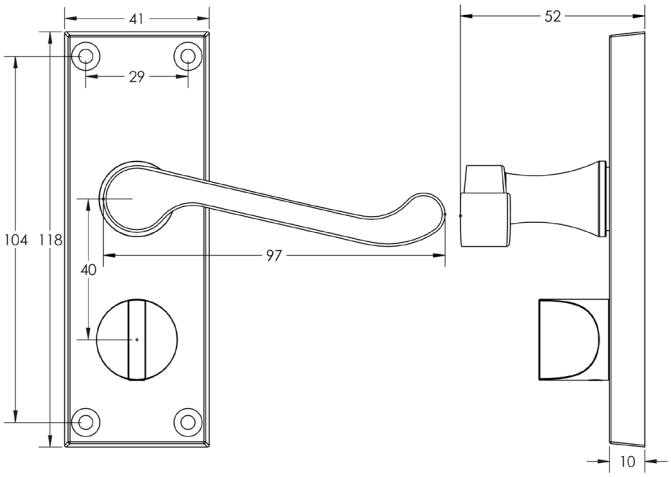

FINISHES

Solid Brass

Polished Brass

Zinc

Polished Chrome

Satin Chrome

Tel: 020 8648 1500 Fax: 020 8648 1626 Email: sales@frelan.co.uk Web: www.frelanhardware.co.uk