FRELAN
HARDWARE

TECHNICAL SPECIFICATION

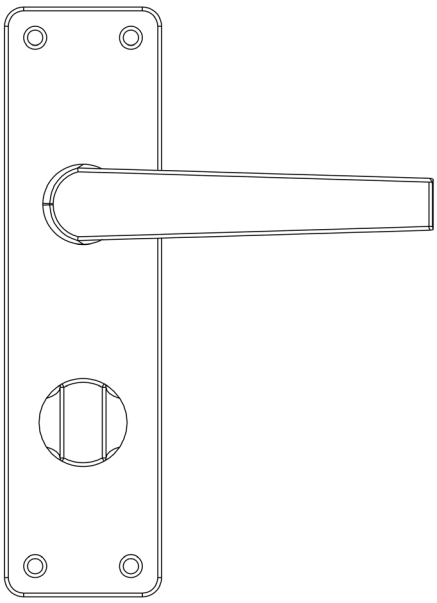

CODE

J5601B

DESCRIPTION

Lever Latchset - Bathroom

STANDARDS

INTERNAL USE

PRODUCT SPECIFICATION

- Sprung
- Aluminium

FINISHES

Satin Anodised Aluminium

TECHNICAL DRAWING

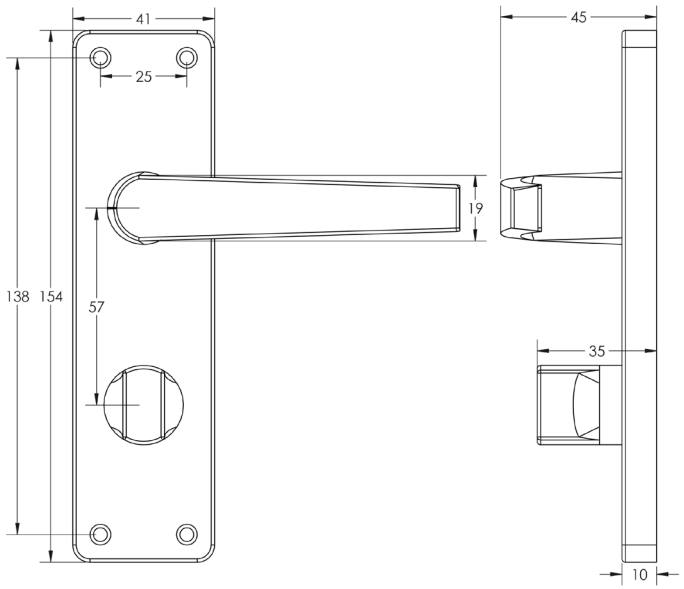

Tel: 020 8648 1500 Fax: 020 8648 1626 Email: sales@frelan.co.uk Web: www.frelanhardware.co.uk