FRELAN
HARDWARE

TECHNICAL SPECIFICATION

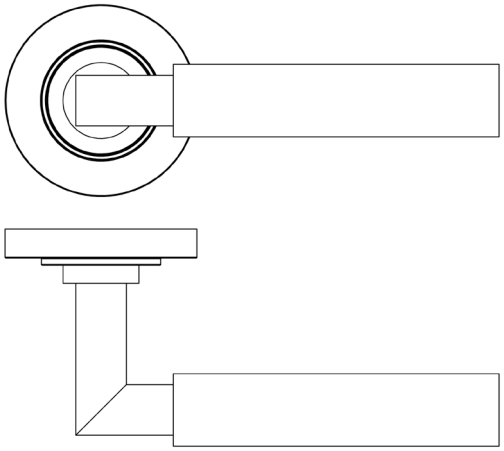

CODE

BUR30KIT79

DESCRIPTION

Lever On Rose

STANDARDS

FD 30/60

10 YEARS

PRODUCT SPECIFICATION

- 38mm centres
- Sprung
- Plain rose
- Grade 4 corrosion
- Matt lacquered solid brass
- Back to back fixing recommended
- Suitable for doors 35-55mm

TECHNICAL DRAWING

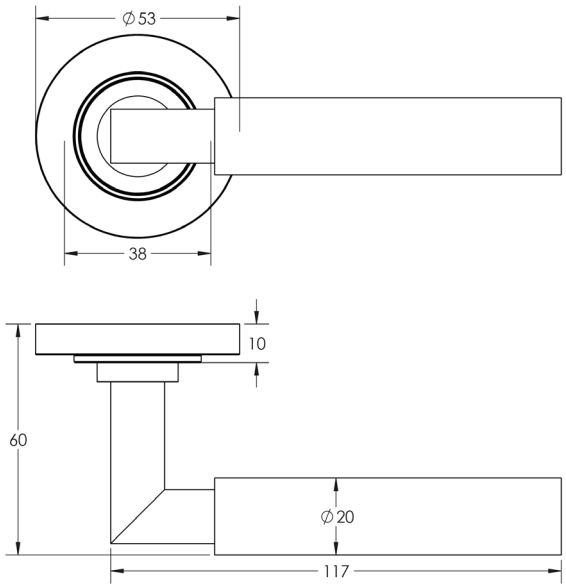

FINISHES

Dark Bronze

Burlington

Tel: 020 8648 1500 Fax: 020 8648 1626 Email: sales@frelan.co.uk Web: www.frelanhardware.co.uk