FRELAN
HARDWARE

TECHNICAL SPECIFICATION

CODE

JLFB14

DESCRIPTION

Fire Brigade Padlock

STANDARDS

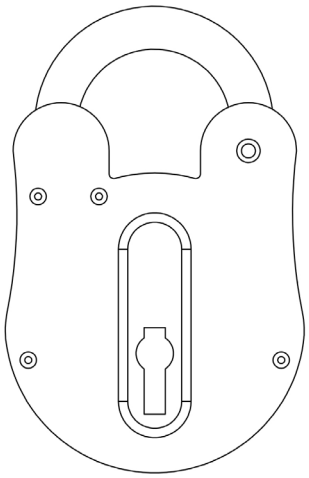

PRODUCT SPECIFICATION

- Mild steel

FINISHES

Yellow

TECHNICAL DRAWING

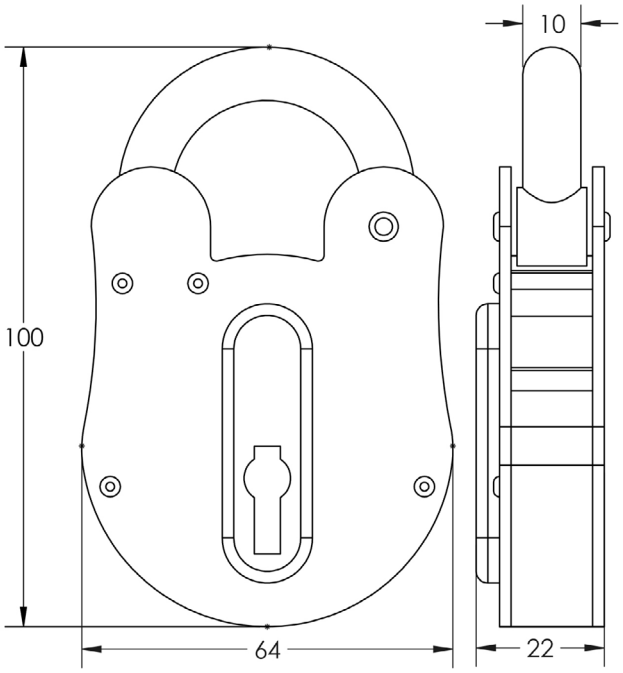

Tel: 020 8648 1500 Fax: 020 8648 1626 Email: sales@frelan.co.uk Web: www.frelanhardware.co.uk